Revisions				
EC #	Zone	Rev	Description	Date
		A	Used OPA's for slewrate limits Changed R30,36 for opamp gain	1/1/93
		A	915 MHz Filter Ressitors Changed	12/03/99

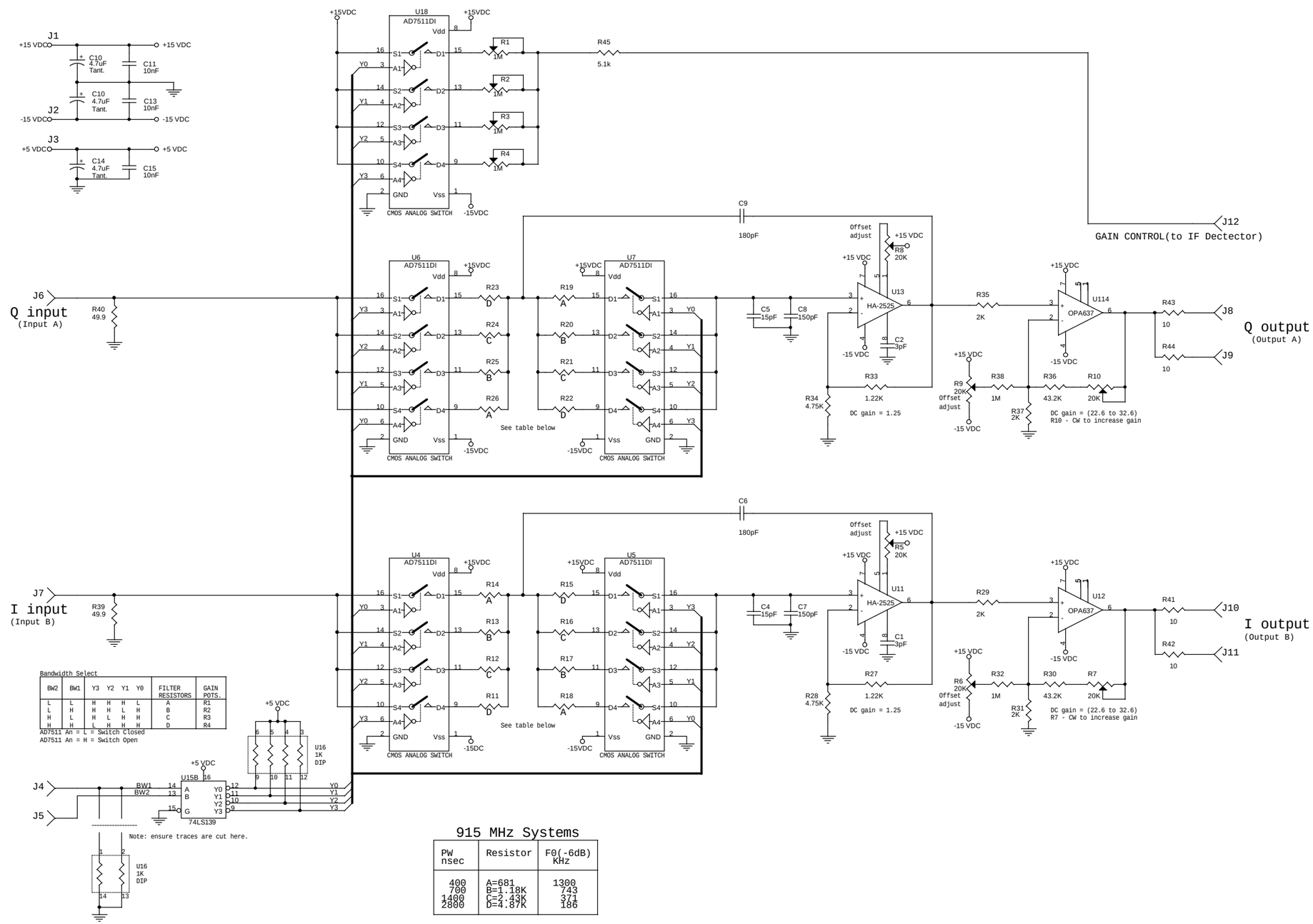

915 MHz Systems

PW nsec	Resistor	F0(-6dB) KHz
400	A=681	1300
700	B=1.18K	743
1400	C=2.43K	371
2800	D=4.87K	186

Tycho 49.25

PW nsec	Resistor	F0 (-6dB) KHz
1000	A=1.62K	520
2000	B=3.32K	260
3000	C=4.99K	173
6700	D=11.0K	77.6

50 MHz

PW	Res.
1000	A=1.82K
2000	B=3.92K
4000	C=7.5K
6700	D=13.0K

1290 MHz

PW	Res.
300	A=511
700	B=1.3K
1400	C=2.74K
2800	D=5.62K

LAP-16000

PW	Res.
1700	A=3.0K
2200	B=4.0K
3300	C=6.8K
6700	D=13.0K

Clouds 1-3

PW	Res.
300	A=475
500	B=800?
600	C=825
1000	D=1.82K

Clouds 4-5

PW	Res.
300	A=475
600	B=825
800	C=1.3K
1300	C=2.0K

Vand. 449

PW	Res.
800	A=1.5K
1700	B=3.0K
3300	C=6.8K
6700	D=13.0K

Application		Reviewed		Date
Next Assy	Used On	Drawn:	T. REESE	12/03/99
50001003	-059 915's	Checked:		
		Design Eng:		
		Product Eng:		
		CCB:		

Radian International, LLC
5600 Airport Blvd.
Boulder, CO 80301
303 443 2378

Title: PCB Assy, Matched Bessel Filter, RX, LAP

Size: C | Document Number: 40001008 | Rev: A

Date: Friday, September 15, 2000 | Sheet 1 of 1